Location:

SYMMONS® Origins®

System with Hand Spray

Temptrol II Pressure Balancing mixing valve with adjustable stop screw to limit handle turn. Wall/hand shower with 5' flexible metal hose, in-line vacuum breaker, wall connection and flange. 30" slide bar for hand shower mounting.

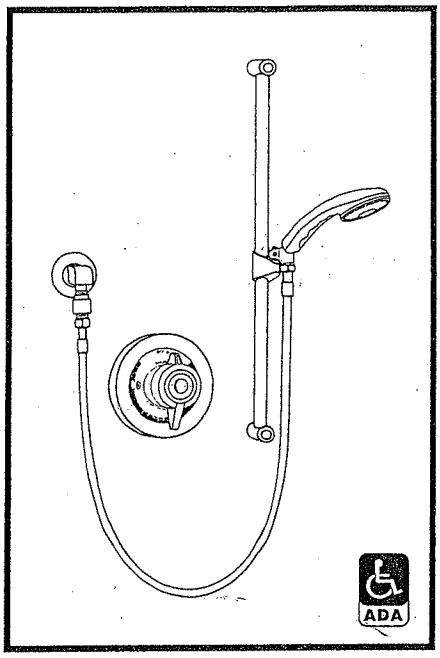

Modifications:

- Integral service stops—allows water shut-off at valve for service ✓
- Chrome brass escutcheon on valve ✓
- 48" adjusting bar in place of standard 30" bar ✓
- 6' hose in place of standard 5' hose ✓
- 2.0 gpm (7.8 L/min) flow rate
- 1.5 gpm (5.7 L/min) flow rate ✓

SYMMONS PRODUCTS MEET ANSI A112.18.1M, EPA '92 AND ALL KNOWN FLOW RATE REQUIREMENTS.
Shower Heads and Hand Showers

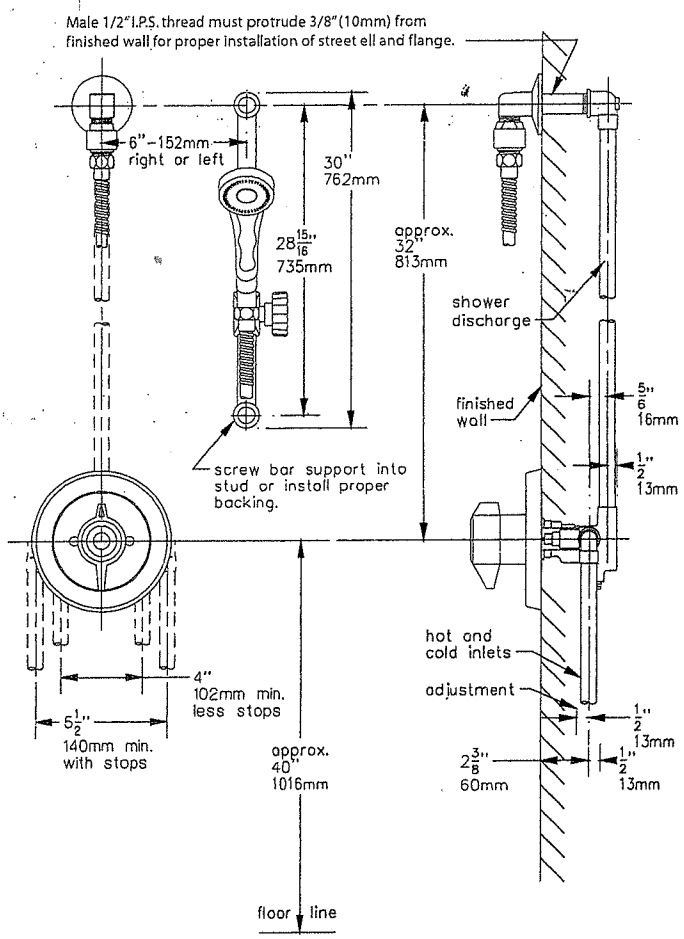

Job/Location

. . . . . .

. . . . . .

Engineer

. . . . . .

. . . . . .

Contractor

. . . . . .

. . . . . .

ADA This drawing to be used for rough-in installation only. All floor to center dimensions optional. Concealed piping and fittings not furnished by manufacturer. Dimensions are for ADA compliance (Americans with Disabilities Act) consult ADAAG or your state regulations for proper product choice and mounting locations. For complete installation, adjustment and service information see installation instructions.

Symmons Industries, Inc. ▪ 31 Brooks Drive ▪ Braintree, MA 02184
(800) 796-6667, (781) 848-2250 ▪ Fax (800) 961-9621, (781) 843-3849
Website: www.symmons.com ▪ Email: customerservice@symmons.com

SYMMONS®
the smart choice™

©2003, 2008 Symmons Industries, Inc. Printed in U.S.A. ▪ 042808